Power Board

GL2450HM//GL2450HE 715G5000P01000003H

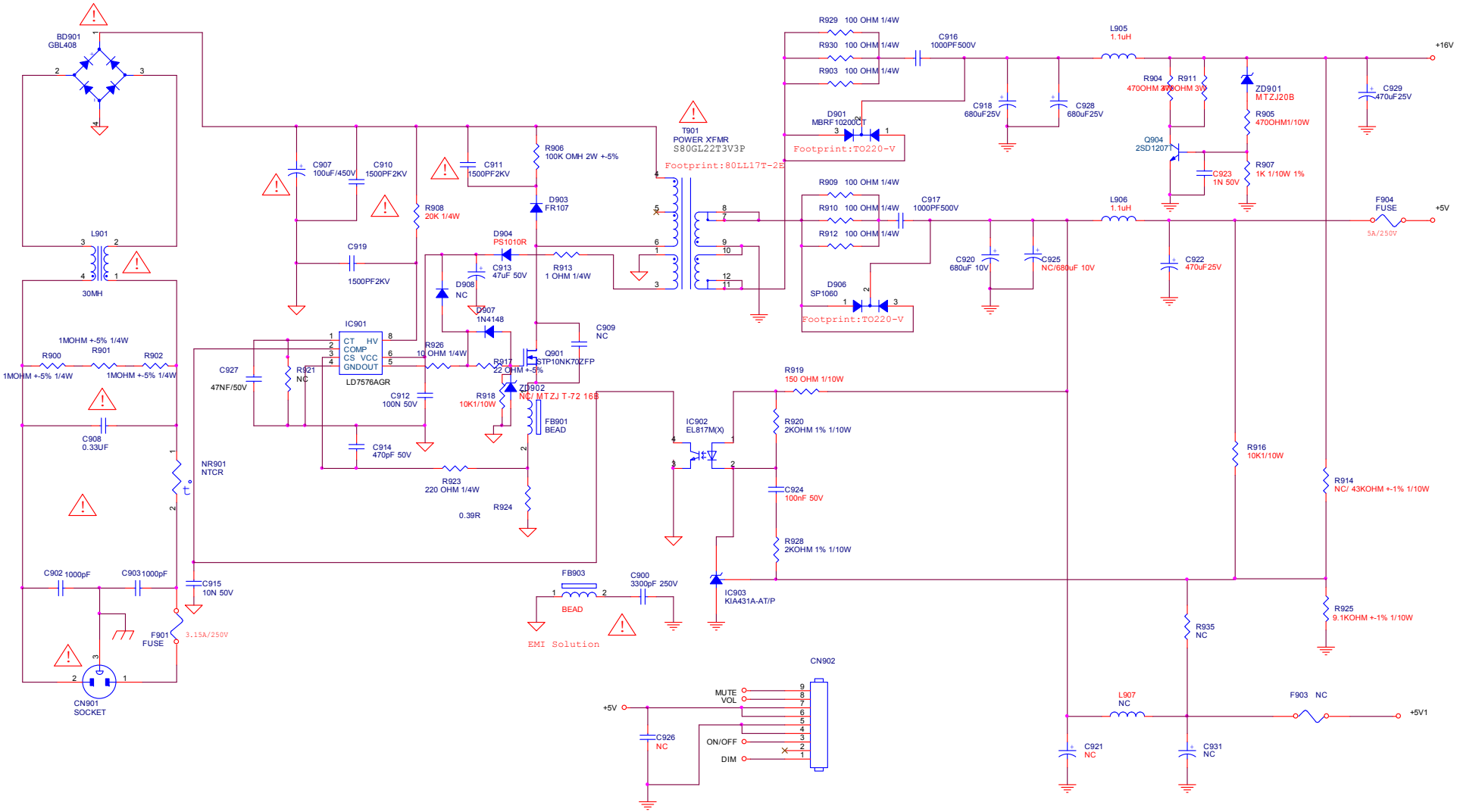

T P V (Top Victory Electronics Co . , Ltd.)		OEM MODEL		Size	Custom
結 隔 瓜 鋼 腹	G5000-P0B-000-0010-7-110602	TPV MODEL	PLPCB9141QQBL	Rev	C
Key Component	01.POWER	PCB NAME	715G4124-P0B	称 客	ODM MODEL
Date	Monday , August 01, 2011	Sheet	of		

BENQ G941

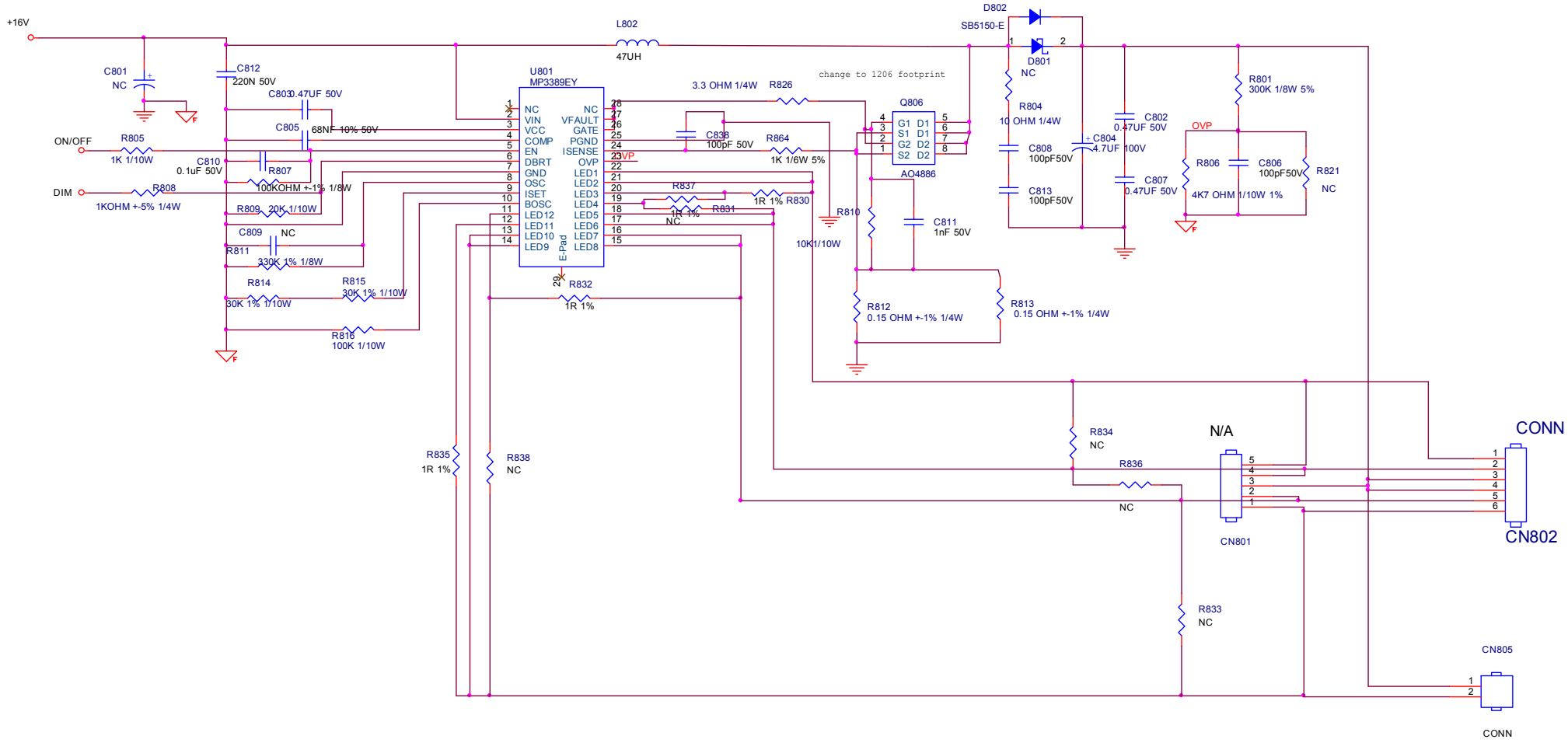
+16V
C801
NC
C812
220N 50V
C803 0.47UF 50V
C805
68NF 10% 50V
ON/OFF
R805
1K 1/10W
C810
0.1uF 50V
R807
100KOHM +-1% 1/8W
DIM
R808
1KOHM +-5% 1/4W
R809 20K 1/10W
C809 NC
R811
330K 1% 1/8W
R814
30K 1% 1/10W
R815
30K 1% 1/10W
R816
100K 1/10W
U801
MP3389EY
NC
VIN
VCC
COMP
EN
DBRT
GND
OSC
ISET
BOSC
LED12
LED11
LED10
LED9
NC
VFAULT
GATE
PGND
ISENSE
OVP
LED1
LED2
LED3
LED4
LED5
LED6
LED7
LED8
E-Pad
OVP
R832
1R 1%
L802
47UH
3.3 OHM 1/4W
R826
C838
100pF 50V
R864
1K 1/6W 5%
R837
1R 1%
R831
1R 1% R830
NC
R810
10K1/10W
change to 1206 footprint
Q806
G1 D1
S1 D1
G2 D2
S2 D2
AO4886
C811
1nF 50V
R812
0.15 OHM +-1% 1/4W
R813
0.15 OHM +-1% 1/4W
D802
SB5150-E
D801
NC
R804
10 OHM 1/4W
C808
100pF50V
C813
100pF50V
C804
4.7UF 100V
C802
0.47UF 50V
C807
0.47UF 50V
R801
300K 1/8W 5%
OVP
R806
4K7 OHM 1/10W 1%
C806
100pF50V
R821
NC
R835
1R 1%
R838
NC
R834
NC
R836
NC
N/A
CN801
CONN
CN802
R833
NC
CN805
CONN